HXLIGHTING™

ECOHX LED™

Covert-X™ Wallpack

The ideal lighting solution for:

- Security lighting
- Accent and perimeter lighting
- Garages
- Entranceways
- Transport platforms / waiting areas



CXFWP50



CXVWP30



CXCWP70

Features

- **Eco** – Earth-friendly design contains no mercury or lead.
- Indoor/outdoor use (-22° F to 114° F)
- Wet location / IP66 rating
- Highest-efficiency **HX-POWR™ Driver** – Best In Class – 120-277V
- **CTC**™ (Custom Thermal Conductivity) die-cast aluminum housing
- Corrosion resistant powder-coat finish
- Anti-glare **Diamond Crystal**™ **Lens**

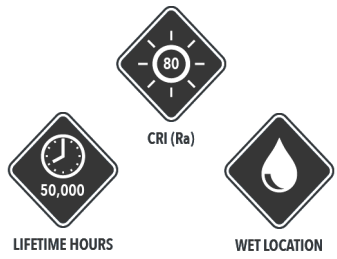



Wattage	Replace HID	Product Code	Description	Color Tone	Photocell
30W	MH50 / MH175	**CXVWP30**	COVERT-X/VERTICAL/WALLPACK/30W	Outdoor	Included
50W	MH175 / MH250	**CXFWP50**	COVERT-X/FULL/WALLPACK/50W	Outdoor	PC/PC2
100W	MH250 / MH400	**CXFWP100**	COVERT-X/FULL/WALLPACK/100W	Outdoor	PC/PC2
70-60-50-40W	MH250 / MH400	**CXCWP70X**	COVERT-X/CUTOFF/WALLPACK/70W	X-Change*	PC/PC2
70-60-50-40W	MH400 / MH400+	**CXCWP120X**	COVERT-X/CUTOFF/WALLPACK/120W	X-Change*	PC/PC2

* X-Change color toned are selectable - Cool/Outdoor

Accessories

Description	Product Code
PHOTOCONTROL/BUTTON/120V	**PC**
PHOTOCONTROL/BUTTON/208-277V	**PC2**
PHOTOCONTROL/SWIVEL/½ INCH NPS/120V	**PCS**
PHOTOCONTROL/SWIVEL/½ INCH NPS/208-277V	**PC2S**
HX-POWR/DRIVER/50W/40V/120-277V **[CXCWP50/CXMFL50]**	**HXPD5040**
HX-POWR/DRIVER/70W/38V/120-277V **[CXCWP70/CXMFL70]**	**HXPD7038**
HX-POWR/DRIVER/120W/43V/120-277V **[CXCWP120]**	**HXPD12043**

RoHS COMPLIANT · IP66 · DLC QPL LISTED™ · UL

© 2026 HX Lighting, Inc. - 17 West Main Street - PO Box 149 – Dallastown, PA 17313 – 717-246-9500 – www.HXLightinginc.com

Photometrics / Dimensions

30W Vertical Wallpack

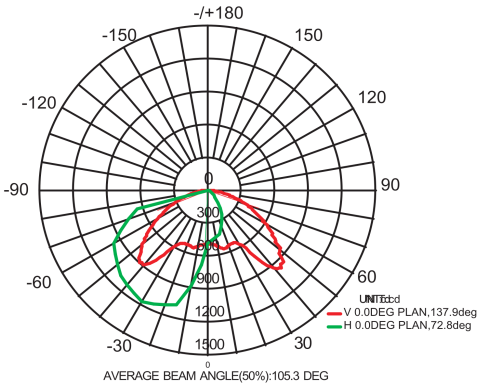

AVERAGE BEAM ANGLE(50%):105.3 DEG

120°

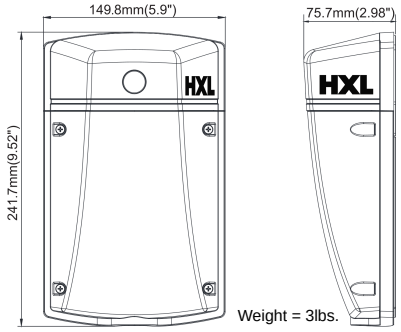

Weight = 3lbs.

20W/30W

50W Full-Cuttoff Wallpack

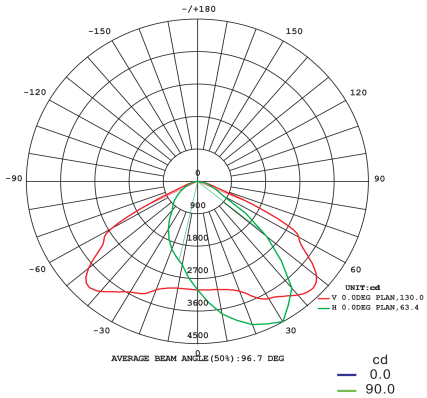

AVERAGE BEAM ANGLE(50%):96.7 DEG

cd
0.0
90.0

Weight = 4lbs.

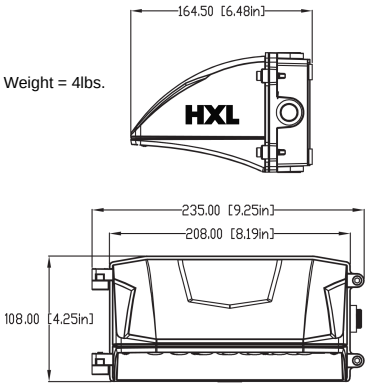

100W Full-Cuttoff Wallpack

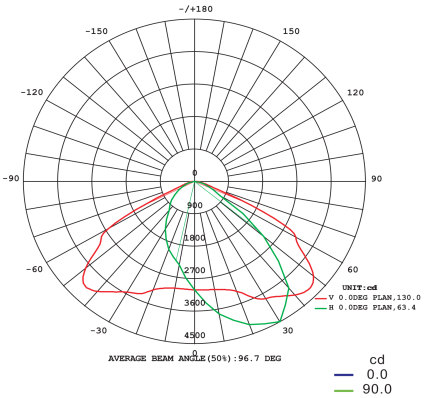

AVERAGE BEAM ANGLE(50%):96.7 DEG

cd
0.0
90.0

Weight = 7lbs.

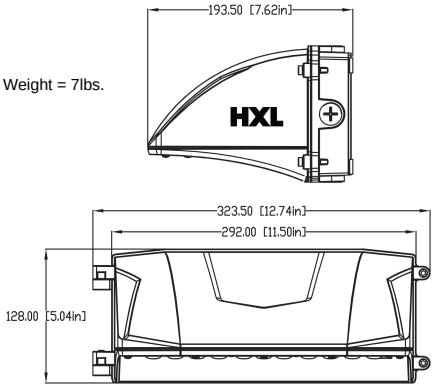

70W Cutoff Wallpack

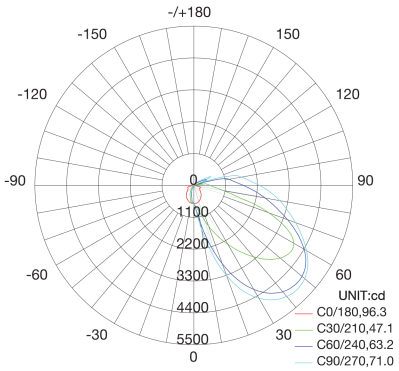

AVERAGE BEAM ANGLE(50%):69.4 DEG

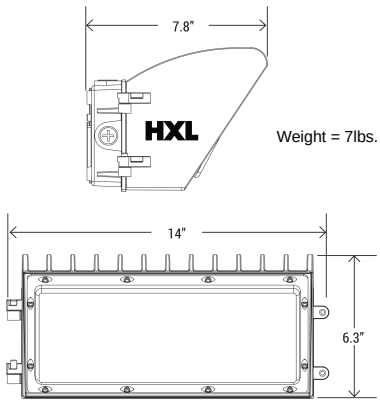

Weight = 7lbs.

120W Cutoff Wallpack

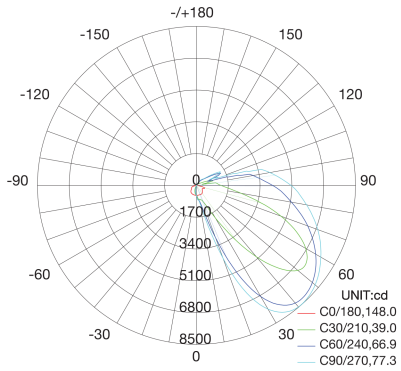

AVERAGE BEAM ANGLE(50%):82.8 DEG

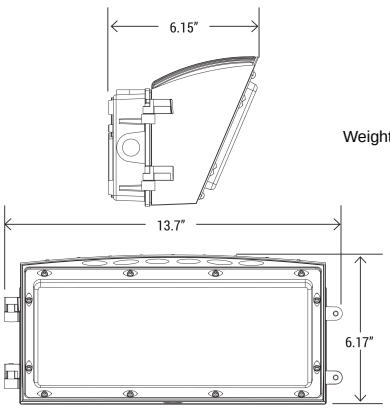

Weight = 9lbs.

© 2026 HX Lighting, Inc. - 17 West Main Street - PO Box 149 – Dallastown, PA 17313 – 717-246-9500 – www.HXLightinginc.com